Product datasheet

Specifications

Green Premium™

analog input module Modicon Quantum - 16 I multirange

140ACI04000

Discontinued on: 31 Dec 2022

To be end-of-service on: 31 Dec 2030

Discontinued

Main

Range Of Product	Modicon Quantum automation platform
Product Or Component Type	Analogue input module
Type Of Filter	Single pole low pass - 3 dB at 34 Hz +/- 25 %

Complementary

Analogue Input Number	16
Input Type	Differential
Addressing Requirement	17 input words
Analogue Input Resolution	0...16000 counts 4...20 mA 0...20000 counts 0...20 mA 0...25000 counts 0...25 mA 0...4095 counts 4...20 mA
Absolute Maximum Input	30 mA
Input Impedance	250 Ohm
Absolute Accuracy Error	+/- 0.125 % of full scale
Linearity Error	+/- 12 µA max 4...20 mA +/- 6 µA max 0...20 mA +/- 6 µA max 0...25 mA +/- 6 µA max 4...20 mA
Accuracy Drift According To Temperature	+/- 0.0025 % of full scale/°C <= 0.0050 % of full scale /°C
Common Mode Rejection	> - 90 dB 60 Hz
Isolation Between Channels And Bus	1780 V AC for 60 s
Update Time	15 ms 2 wires/4 wires
Fault Type	Broken wire 4...20 mA
Marking	CE
Local Signalling	1 LED (green) for bus communication is present (Active) 1 LED (red) for external fault 16 LEDs (green) for channel is turned on 16 LEDs (red) for channel fault
Bus Current Requirement	360 mA
Power Dissipation In W	5 W
Module Format	Standard
Net Weight	0.3 kg

Disclaimer: This documentation is not intended as a substitute for and is not to be used for determining suitability or reliability of these products for specific user applications

Environment

Standards	UL 508 CSA C22.2 No 142
Product Certifications	FM Class 1 Division 2 cUL
Resistance To Electrostatic Discharge	4 kV contact conforming to IEC 801-2 8 kV on air conforming to IEC 801-2
Resistance To Electromagnetic Fields	10 V/m 80…1000 MHz conforming to IEC 801-3
Ambient Air Temperature For Operation	0…60 °C
Ambient Air Temperature For Storage	-40…85 °C
Relative Humidity	95 % without condensation
Operating Altitude	<= 5000 m

Packing Units

Unit Type Of Package 1	PCE
Number Of Units In Package 1	1
Package 1 Height	4.6 cm
Package 1 Width	16.5 cm
Package 1 Length	31.0 cm
Package 1 Weight	433.0 g
Unit Type Of Package 2	S03
Number Of Units In Package 2	7
Package 2 Height	30.0 cm
Package 2 Width	30.0 cm
Package 2 Length	40.0 cm
Package 2 Weight	3.462 kg

Contractual warranty

Warranty	18 months

Sustainability

Green Premium™ label is Schneider Electric's commitment to delivering products with best-in-class environmental performance. Green Premium promises compliance with the latest regulations, transparency on environmental impacts, as well as circular and low-CO_2 products.

Guide to assessing product sustainability is a white paper that clarifies global eco-label standards and how to interpret environmental declarations.

Learn more about Green Premium >

Guide to assess a product's sustainability >

RoHS/REACh

Well-being performance

Reach Free Of Svhc	
Mercury Free	
Rohs Exemption Information	Yes

Certifications & Standards

Eu Rohs Directive	Pro-active compliance (Product out of EU RoHS legal scope) EU RoHS Declaration
China Rohs Regulation	China RoHS declaration
Weee	The product must be disposed on European Union markets following specific waste collection and never end up in rubbish bins
Circularity Profile	End of Life Information

Dimensions Drawings

Racks for Modules Mounting

Dimensions of Modules and Racks

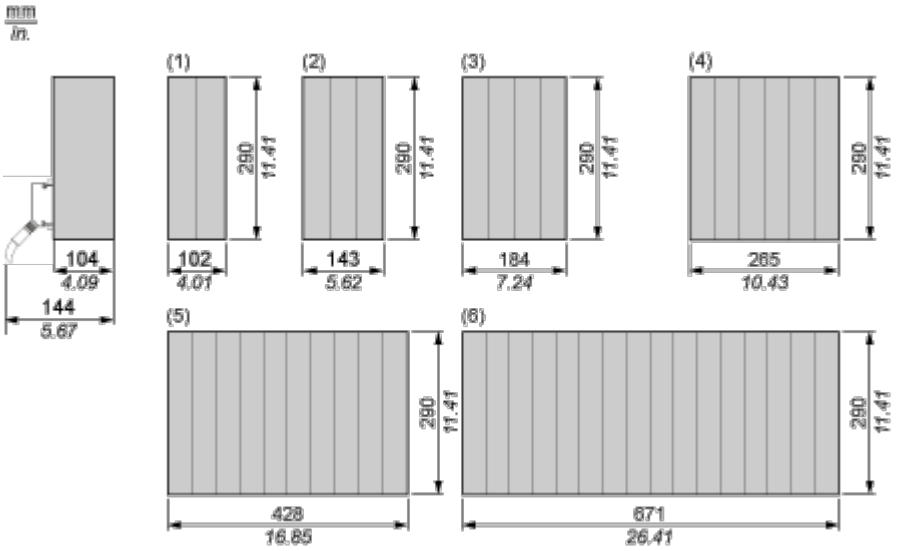

(1) 2 slots

(2) 3 slots

(3) 4 slots

(4) 6 slots

(5) 10 slots

(6) 16 slots

Connections and Schema

High Density Analog Input Module (16-Channel)

Wiring Diagram

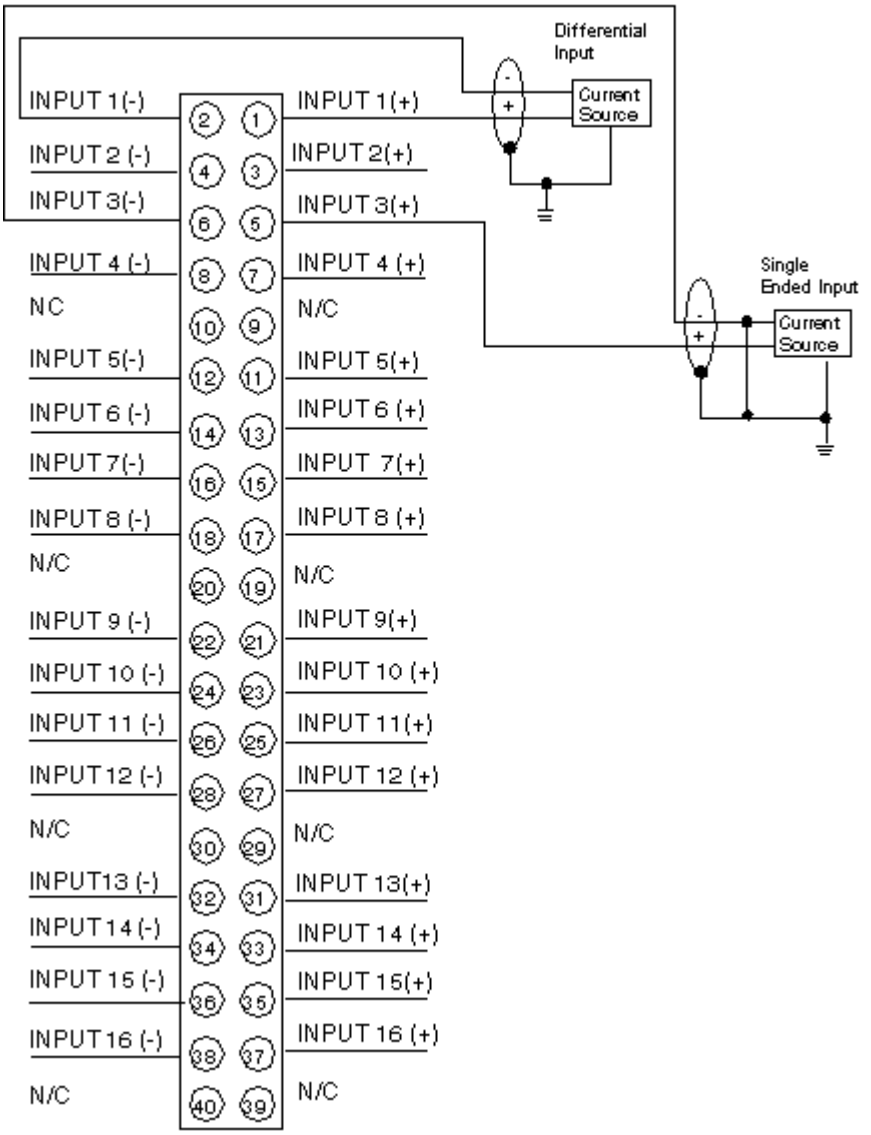

N/C Not Connected

The maximum channel to channel working voltage cannot exceed 30 Vdc.